MINI BEVELER

EXPLODED VIEW

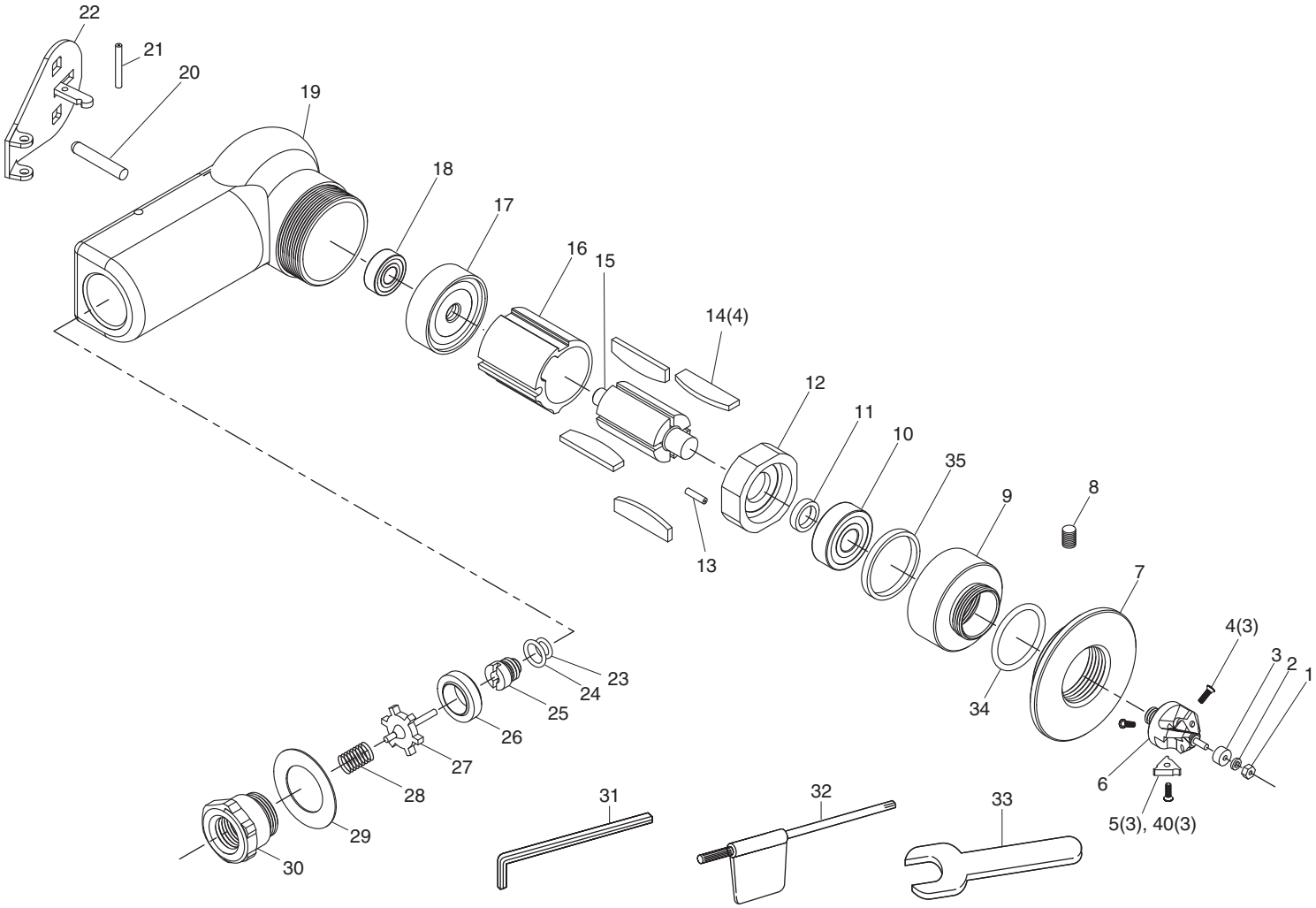

PARTS LIST

Index No.	Parts No.	Description	Qty. Per tool
1		Hex. Nut	1
2		Spring Washer	1
3		Ball Bearing	1
4		Cutter Bolt	3
5		Cutter (1set 10pcs)	3
6		Cutter Holder	1
7		Flange	1
8		Screw	1
9		Lock Ring	1
10		Ball Bearing	1
11		Collar	1
12		Front Plate	1
13		Roll Pin	1
14		Rotor Blade	4
15		Rotor	1
16		Cylinder	1
17		Rear Plate	1
18		Ball Bearing	1
19		Body	1
20		Valve Shaft	1
21		Roll Pin	1
22		Safety Lever	1
23		O-Ring	1
24		O-Ring	1
25		Inner Bolt	1
26		Valve Seat	1
27		Valve	1
28		Valve Spring	1
29		Rear Gasket	1

Index No.	Parts No.	Description	Qty. Per tool
30		Inlet Bushing	1
31		Hex. Wrench	1
32		Flat Torx Wrench	1
33		Spanner Wrench	1
34		O-Ring	1
35		Lock Washer	1
40		Cutter (1set 10pcs)	3

The types and specifications may be changed without notice.
201512S