3/8" COMPOSITE IMPACT WRENCH

EXPLODED VIEW

SP-7146EXS

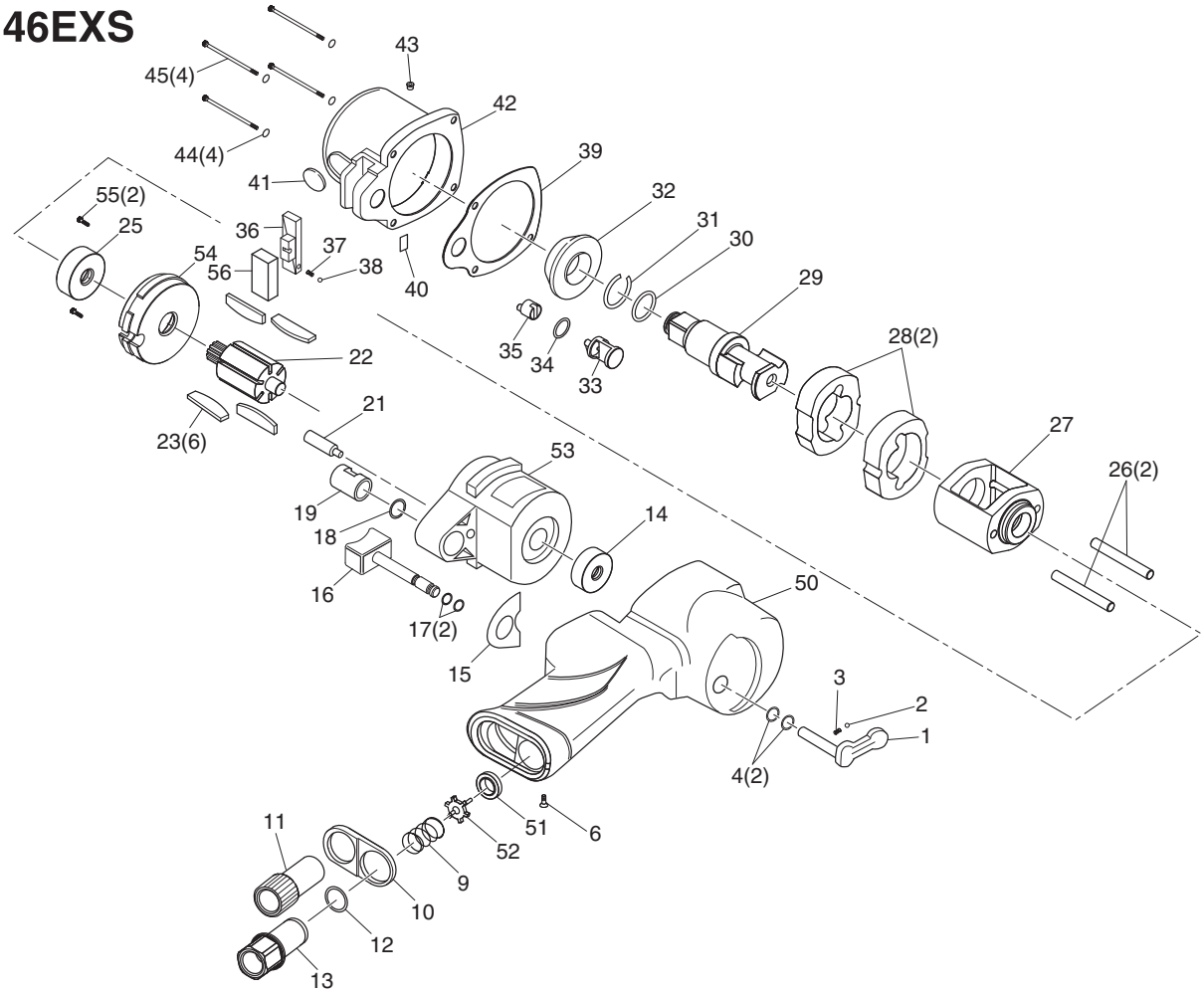

PARTS LIST

Index No.	Parts No.	Description	Qty. Per tool
1	7146-01	Regulator Lever	1
2	7146-02	Steel Ball	1
3	7146-03	Regulator Spring	1
4	7146-04	O-Ring	2
6	7146-06	Hex. Screw	1
9	7146-09	Valve Spring	1
10	7146-10	Deflector	1
11	7146-11	Silencer	1
12	7146-12	O-Ring	1
13	7146-13	Inlet Bushing	1
14	7146-14	Ball Bearing	1
15	7146-15	Gasket	1
16	7146-16	Trigger	1
17	7146-17	O-Ring	2
18	7146-18	O-Ring	1
19	7146-19	Reverse Bush	1
21	7146-21	Regulator	1
22	7146-22	Rotor	1
23	7146-23	Rotor Blade	6
25	7146-25	Ball Bearing	1
26	7146-26	Hammer Pin	2
27	7146-27	Hammer Frame	1
28	7146-28	Hammer	2
29	7146S-29	Spindle (3/8")	1
30	7146S-30	O-Ring	1
31	7146S-31	Retaining Ring	1
32	7146-32	Spindle Bush	1
33	7146-33	Reverse Valve	1
34	7146-34	O-Ring	1
35	7146-35	Reverse Shaft	1
36	7146-36	Reverse Button	1

Index No.	Parts No.	Description	Qty. Per tool
37	7146-37	Regulator Spring	1
38	7146-38	Steel Ball	1
39	7146-39	Hammer Case Gasket	1
40	7146-40	Seal	1
41	7146-41	Plate	1
42	7146-42	Hammer Case	1
43	7146-43	Grease Fitting	1
44	7146-44	Washer	4
45	7146-45	Hex. Screw	4
50	7146EX-50	Body Housing	1
51	7146EX-51	Valve Seat	1
52	7146EX-52	Valve	1
53	7146EX-53	Cylinder	1
54	7146EX-54	Front End Plate	1
55	7146EX-55	Hex. Screw	2
56	7146EX-56	Sponge	1

The types and specifications may be changed without notice.