# STRAIGHT DIE GRINDER [SHANK SIZE:1/4"]

**EXPLODED VIEW**

## SP-1523

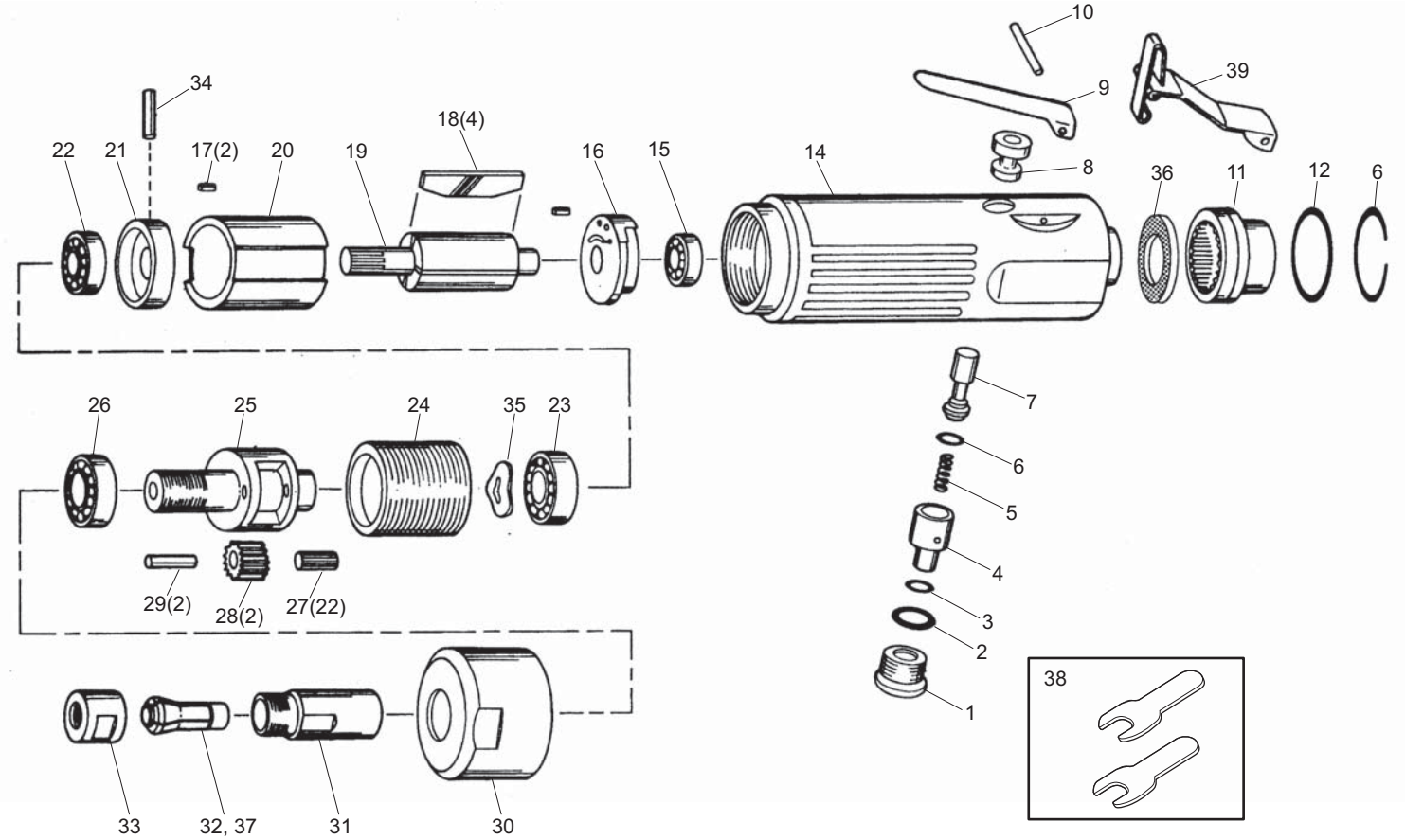


**PARTS LIST**

| Index No. | Parts No. | Description | Qty. Per tool |
|---|---|---|---|
| 1 | 523-01 | Valve Screw | 1 |
| 2 | 523-02 | O-Ring | 1 |
| 3 | 523-03 | O-Ring | 1 |
| 4 | 523-04 | Air Regulator | 1 |
| 5 | 523-05 | Spring | 1 |
| 6 | 523-06 | O-Ring | 1 |
| 7 | 523-07 | Valve Stem | 1 |
| 8 | 523-08 | Valve Bushing | 1 |
| 9 | 523-09 | Throttle Lever | 1 |
| 10 | 523-10 | Lever Pin | 1 |
| 11 | 523-11 | Exhaust Sleeve | 1 |
| 12 | 523-12 | O-Ring | 1 |
| 13 | 523-13 | Retainer Ring | 1 |
| 14 | 523-14 | Motor Housing Assy Incl:8 | 1 |
| 15 | 523-15 | Ball Bearing | 1 |
| 16 | 523-16 | Rear End Plate | 1 |
| 17 | 523-17 | Motor Pin | 2 |
| 18 | 523-18 | Rotor Blade | 4 |
| 19 | 523-19 | Rotor | 1 |
| 20 | 523-20 | Cylinder | 1 |
| 21 | 523-21 | Front End Plate | 1 |
| 22 | 523-22 | Ball Bearing | 1 |
| 23 | 523-23 | Ball Bearing | 1 |
| 24 | 523-24 | Internal Gear | 1 |
| 25 | 523-25 | Planet Cage | 1 |
| 26 | 523-26 | Ball Bearing | 1 |
| 27 | 523-27 | Needle Bearing | 22 |
| 28 | 523-28 | Planet Gear | 2 |
| 29 | 523-29 | Planet Pin | 2 |

| Index No. | Parts No. | Description | Qty. Per tool |
|---|---|---|---|
| 30 | 523-30 | Housing Cap | 1 |
| 31 | 523-31 | Pinion | 1 |
| 32 | 523-32 | 1/4" Collet | 1 |
| 33 | 523-33 | Collet Nut | 1 |
| 34 | 523-34 | Roll Pin | 1 |
| 35 | 523-35 | Wave Washer | 1 |
| 36 | 523-36 | Muffler | 1 |
| 37 | 523-37 | 6mm Collet | 1 |
| 38 | 523-38 | Spanner Set | 1 |
| 39 | 523-39 | Safety Lever | 1 |

The types and specifications may be changed without notice.