3/8" CAP. AIR DRILL

EXPLODED VIEW

SP-1511(KL)

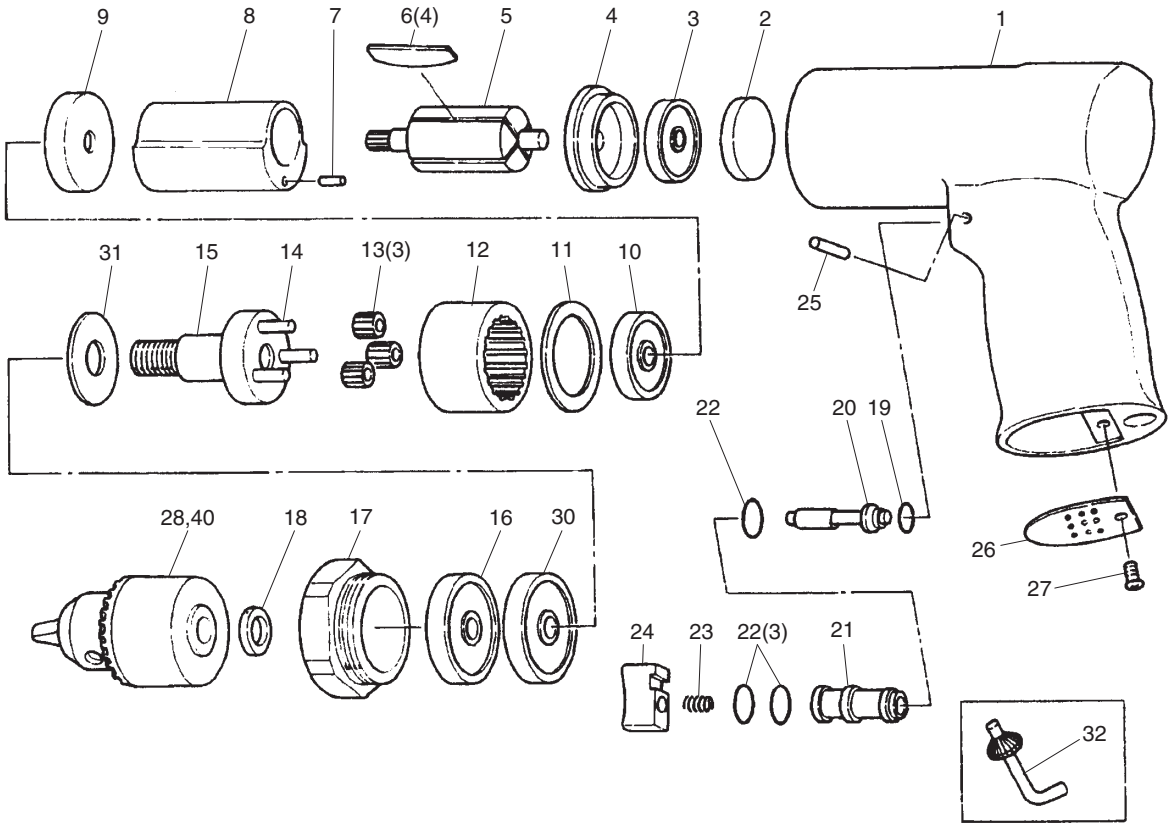

PARTS LIST

Index No.	Parts No.	Description	Qty. Per tool
1	511-01	Body	1
2	511-02	Bearing Cap	1
3	511-03	Ball Bearing	1
4	511-04	Rear End Plate	1
5	511-05	Rotor	1
6	511-06	Rotor Blade	4
7	511-07	Spring Pin	1
8	511-08	Cylinder	1
9	511-09	Front End Plate	1
10	511-10	Ball Bearing	1
11	511-11	Washer	1
12	511-12	Internal Gear	1
13	511-13	Planet Gear	3
14	511-14	Planet Pin	
15	511-15	Spindle Assy (Incl:14)	1
16	511-16	Ball Bearing	1
17	511-17	Bearing Housing	1
18	511-18	Spacer	1
19	511-19	O-Ring	1
20	511-20	Throttle Valve	1
21	511-21	Throttle Bushing	1
22	511-22	O-Ring	1
23	511-23	Spring	1
24	511-24	Trigger	1
25	511-25	Pin	1
26	511-26	Exhaust Muffler	1
27	511-27	Screw	1
28	511-28	Drill Chuck	1
29	511-29	O-Ring	1

Index No.	Parts No.	Description	Qty. Per tool
30	511-30	Ball Bearing	1
31	511-31	Seal Plate	1
32	511-32	Chuck Key	1
40	511-40	Key Less Chuck	1

The types and specifications may be changed without notice.