1/4" CAP. 20,000RPM ANGLE HEAD GRINDER

EXPLODED VIEW

SP-1200AH

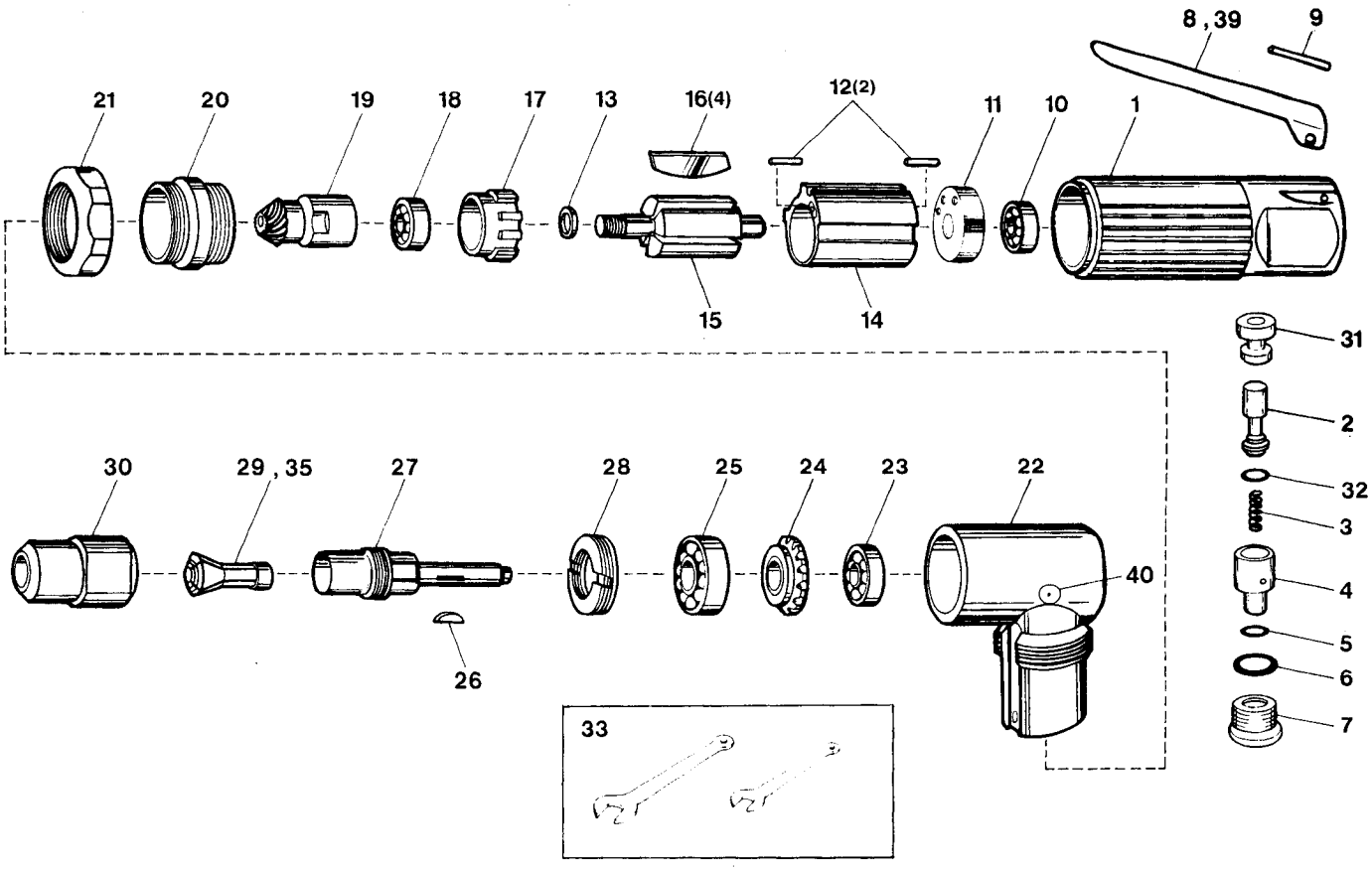

PARTS LIST

Index No.	Parts No.	Description	Qty. Per tool
1	200AH01	Housing Assy Incl: (31)	1
2	200AH02	Throttle Valve	1
3	200AH03	Spring	1
4	200AH04	Air Regulator	1
5	200AH05	"O" Ring	1
6	200AH06	"O" Ring	1
7	200AH07	Valve Plug	1
8	200AH08	Throttle Lever	1
9	200AH09	Roll Pin	1
10	200AH10	Ball Bearing	1
11	200AH11	Rear End Plate	1
12	200AH12	Roll Pin	2
13	200AH13	Rotor Collar	1
14	200AH14	Cylinder	1
15	200AH15	Rotor	1
16	200AH16	Rotor Blade	4
17	200AH17	Front End Plate	1
18	200AH18	Ball Bearing	1
19	200AH19	Pinion	1
20	200AH20	C p Lock	1
21	200AH21	Cap	1
22	200AH22	Angle Housing Assy Incl: (40)	1
23	200AH23	Ball Bearing	1
24	200AH24	Gear	1
25	200AH25	Bearing	1
26	200AH26	Key	1
27	200AH27	Spindle	1
28	200AH28	Clamp Nut	1
29	200AH29	Collet (1/4")	1

Index No.	Parts No.	Description	Qty. Per tool
30	200AH30	Collet Nut	1
31	200AH31	Valve Bushing	1
32	200AH32	"O" Ring	1
33	200AH33	Spanner Wrench	2
35	200AH35	6mm Collet	1
39	200AH39	Safety Lever	1
40	200AH40	Oil Cup	1

The types and specifications may be changed with or without notice.